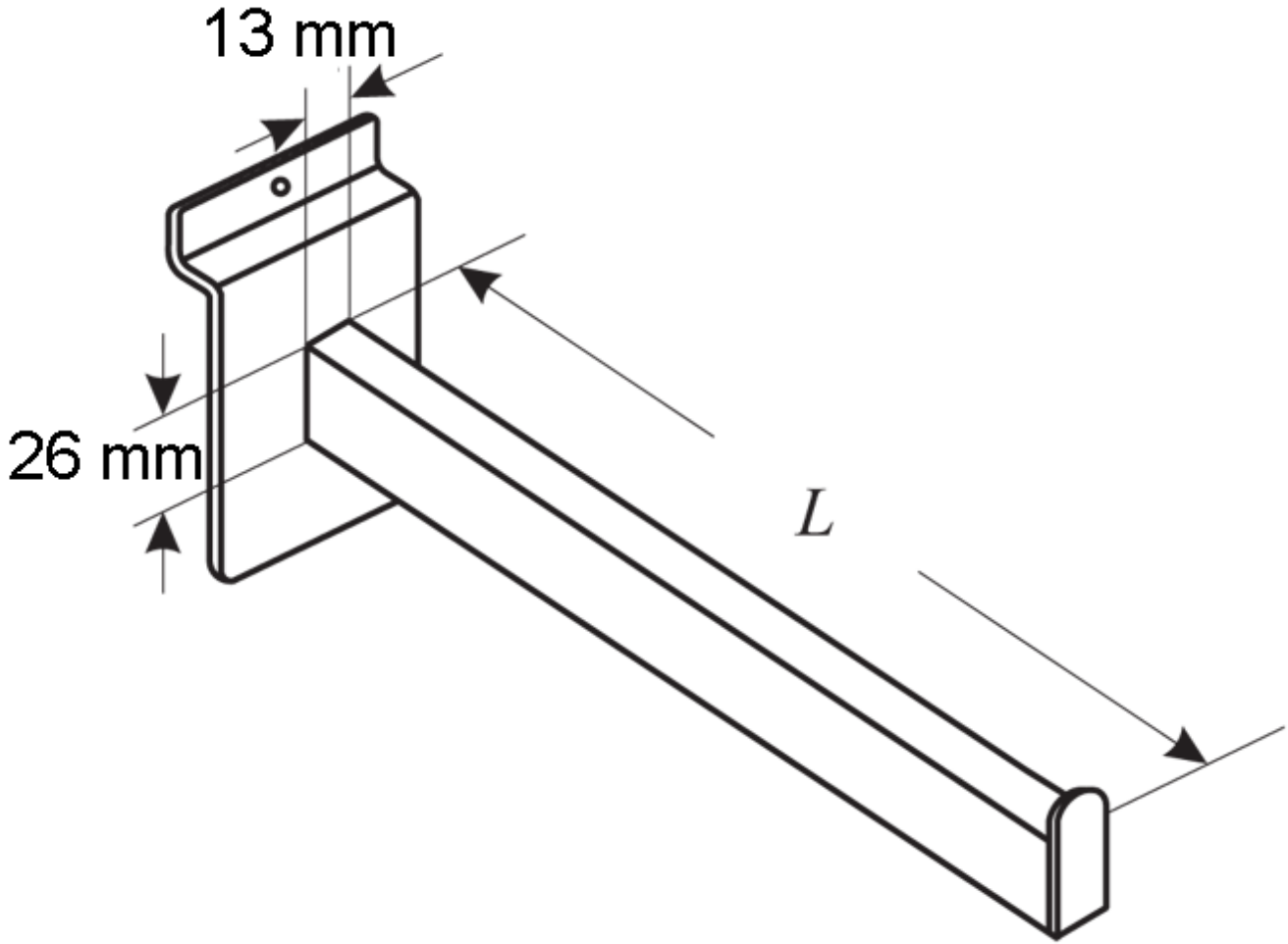
13 mm
26 mm
L